TELEX

Technical Data Sheet

Model 5x5 Pro III Headset

General Description

The Telex Model 5x5 Pro III is a lightweight, single-sided, aviation headset. It features an eartip-style receiver, which provides better speech intelligibility than an earmuff-style headset in quiet to moderately noisy environments. It also features a detachable headband for optional wearing configurations using eyeglasses or a custom earmold. The headset is approved for aviation use under **FAA** (Federal Aviation Agency) TSO C57 and C58.

Design Features

Receiver and Eartip

A magnetic receiver element is used. Sound is conducted from the receiver to the ear via a flexible vinyl tube terminated with a removable soft plastic eartip. The eartip fits in the ear canal of the wearer. Three eartip sizes are included with the headset to accommodate various ear canal sizes

Microphone and Amplifier

A noise canceling, electret element and microphone amplifier are used. The amplifier receives power from the aircraft radio via the microphone plug. The amplifier output level is adjustable through an opening in the side of the amplifier housing. (Adjustment by a qualified avionics technician is recommended.) For best performance the microphone should be positioned at the side of the mouth and close to the lower lip.

Wearer Options

The headset features a detachable headband and pivot assembly. The boom may be rotated over a 180-degree range, permitting the microphone to be positioned on either side of the head. Alternately, the headband may be removed, and the headset may be worn on eyeglasses. An eyeglass adapter kit is supplied with the headset, and can accommodate wire or plastic eyeglass bows. The headset may also be worn with a custom earmold (not supplied). The microphone boom may be positioned on either side of the head when using eyeglasses or a custom earmold.

Comfort

The headband consists of two stainless-steel springs covered with soft, polypropylene webbing. The springs are bendable to adjust the lateral pressure on the head. Also, the distance between the springs may be adjusted for optimum load distribution and wearer comfort. The headpads are mounted on adjustable stainless-steel sliders. The headpad cushions are soft polyester-urethane foam, and are adhesive-backed for easy field replacement.

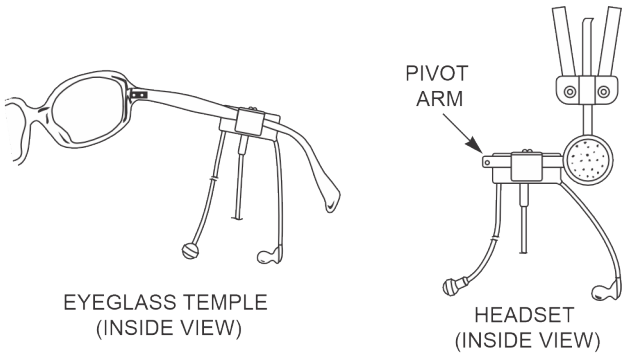

Mounting Configurations

Copyright© Bosch Security Systems, LLC 2023

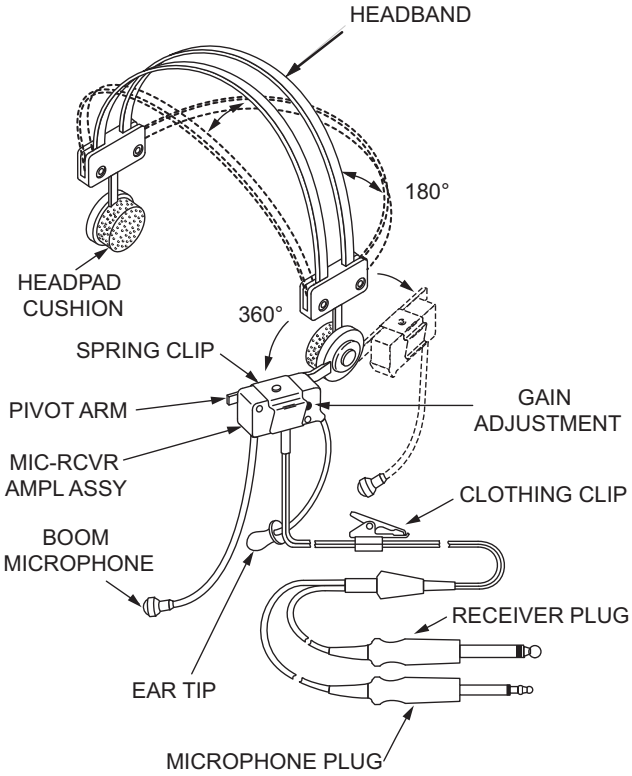

Wiring Diagram

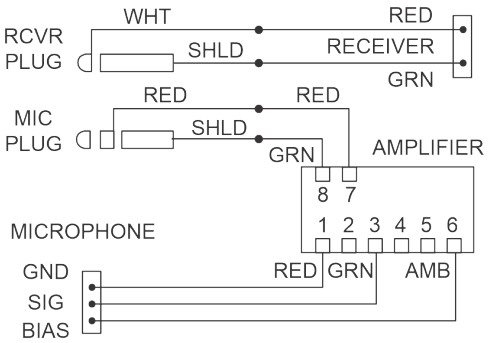

Wiring Diagram

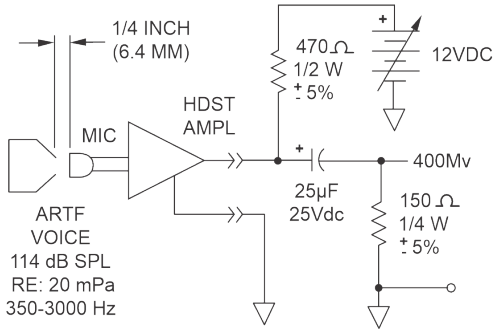

Test Circuit

Specifications

Receiver

Type: Magnetic

Frequency Response: 100-3000Hz

Sensitivity: 119dB SPL nominal (1mW at 1kHz input)

Matching Impedance; 150–600 Ohms

Microphone and Amplifier (Provides carbon equivalent output)

Element Type: Noise-cancelling electret

Frequency Response: 300–5000Hz

Sensitivity: -48dB nominal (ref: 1V/µbar at 1kHz) with test circuit

Matching Impedance: 50–600 Ohms

Operating Voltage: 8–16Vdc

Cordage

Style: Y-cord

Length: 6ft. (1.8m)

Microphone Plug: PJ-068 equivalent

Receiver Plug: PJ-055 equivalent

Weight

With Headband: 4.3oz (121g)

Without Headband: 2.5oz (69g)

NOTE: When the headset is used with the cord clip, most of the cord weight of 2oz (55g) may be subtracted to find on-the-head weight.

Color

Black

Ordering Information

Telex Model 5x5 Pro III Headset* ..... Catalog No. 64000-100
(With Eyeglass Adapter Kit, Clothing Clip, Ear Tips and Carrying Pouch)

Replacement Eartip Kit (includes vinyl tubing and three sizes of eartips) ..... Catalog No. 800456013

Replacement Headpad Cushion (2 required per headset) ..... Catalog No. 63575000

Replacement Clothing Clip ..... Catalog No. 590637000

Replacement Carry Pouch ..... Catalog No. 57893000

Replacement Eyeglass Adapter Kit ..... Catalog No. 64068000

Optional PT-300 Portable Push-To-Talk Switch** ..... Catalog No. 63966000

*Other versions available upon request.

**For aircraft without a fixed push-to-talk switch, a portable push-to-talk switch must be used.